Auckland: (09) 2717 234
Christchurch: (03) 741 6241

sales@machineryhouse.co.nz
www.machineryhouse.co.nz

Product Brochure For L9320

6mm Keyway Broaching Insert - HIN

Slip/Snug Fit

Pack of 2

Back In Stock Soon

Ex GST	Inc GST
$137.20	$157.78



Description

HIN, 6mm Keyway Broaching Insert, H7-SM Slip/Snug Fit, Size 6, TiN Coated - Pack of 2

Auckland: (09) 2717 234
Christchurch: (03) 741 6241

sales@machineryhouse.co.nz
www.machineryhouse.co.nz

Product Brochure For L9320

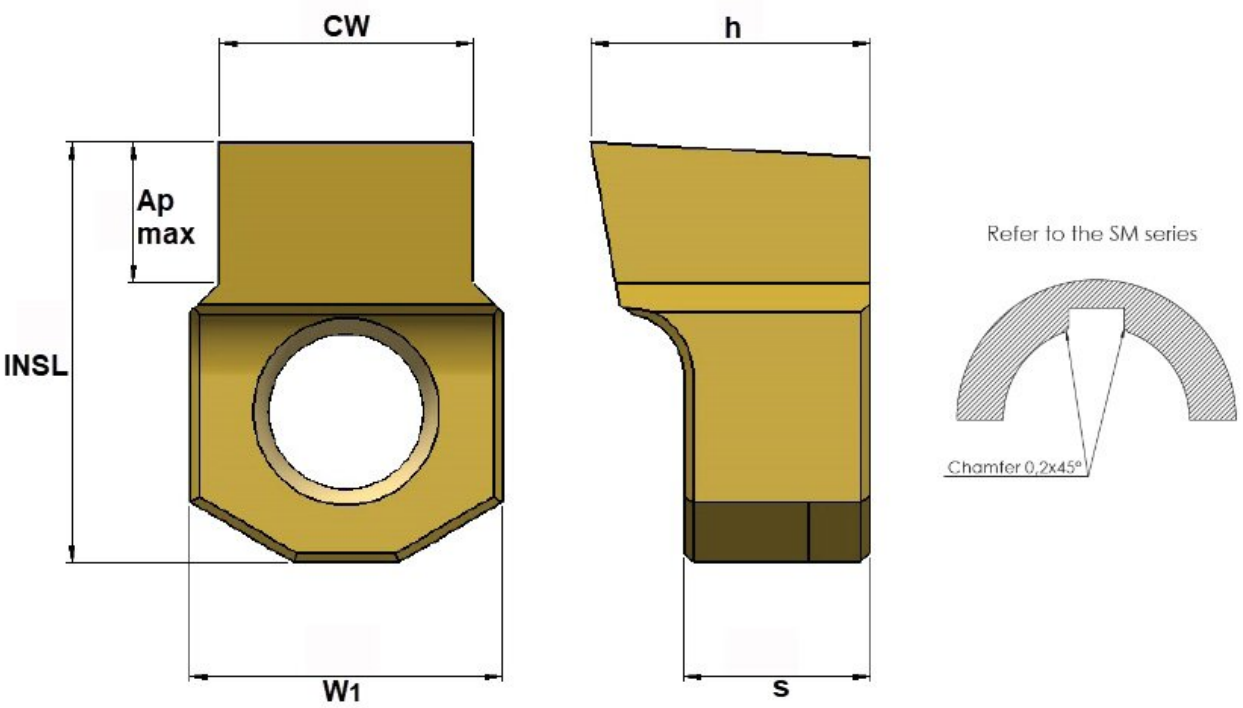

Specific Features



Box Of Two



Side View